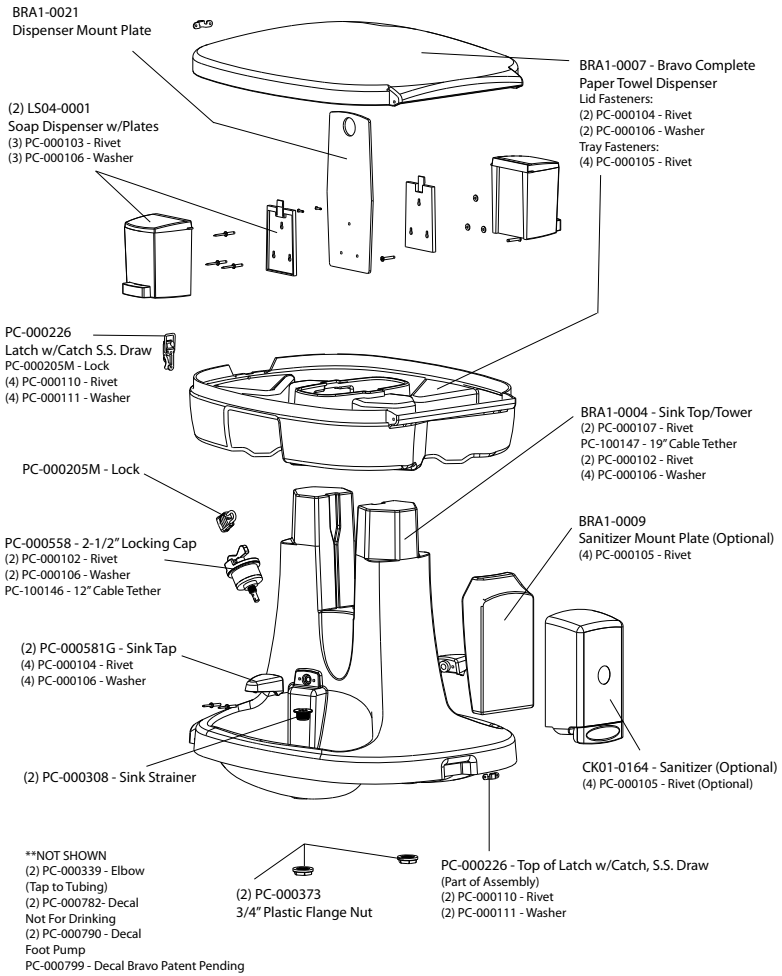

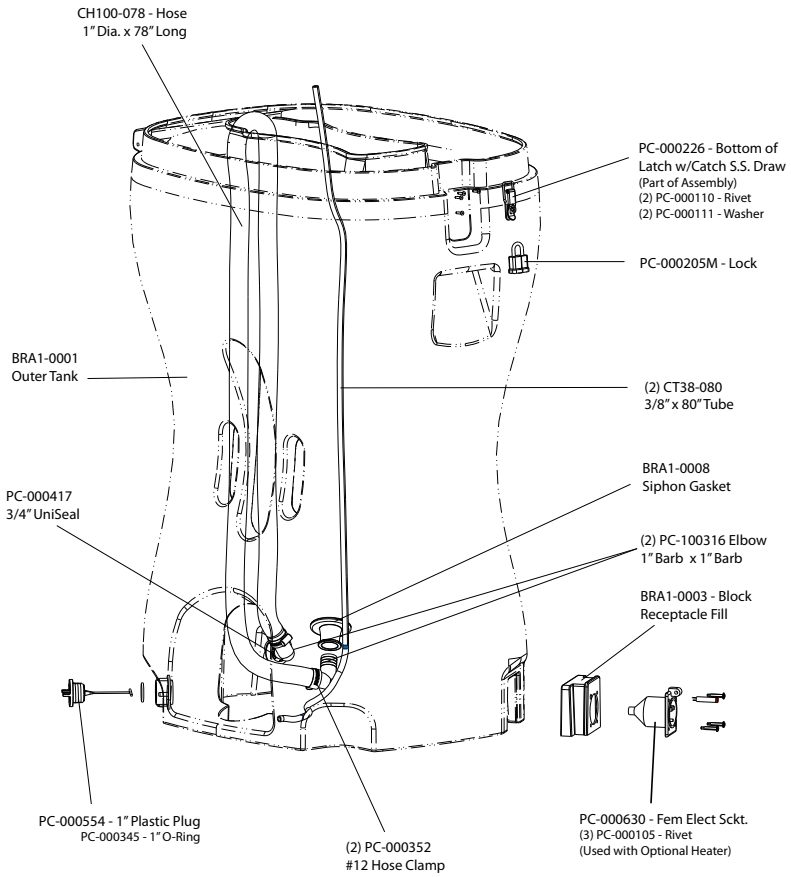

**NOT SHOWN
PC-000783 - Decal Transport

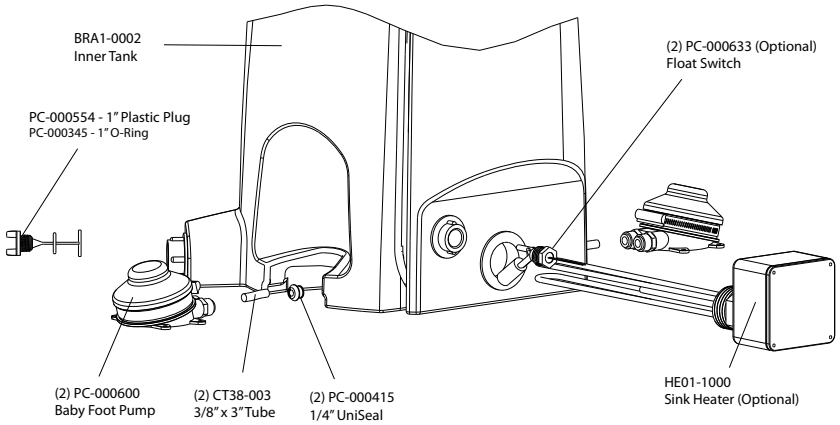
BRA1-0002
Inner Tank
PC-000554 - 1" Plastic Plug
PC-000345 - 1" O-Ring
(2) PC-000633 (Optional)
Float Switch
(2) PC-000600
Baby Foot Pump
(2) CT38-003
3/8" x 3" Tube
(2) PC-000415
1/4" UniSeal
HE01-1000
Sink Heater (Optional)

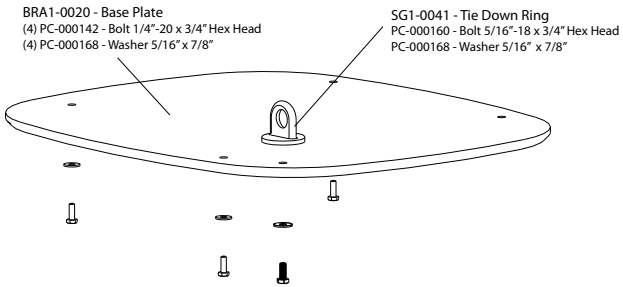
BRA1-0020 - Base Plate
(4) PC-000142 - Bolt 1/4"-20 x 3/4" Hex Head
(4) PC-000168 - Washer 5/16" x 7/8"
SG1-0041 - Tie Down Ring
PC-000160 - Bolt 5/16"-18 x 3/4" Hex Head
PC-000168 - Washer 5/16" x 7/8"